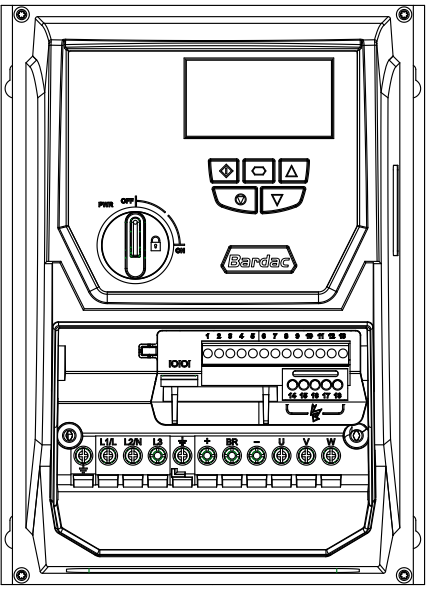
PWR
OFF
ON
Bardac
1 2 3 4 5 6 7 8 9 10 11 12 13
14 15 16 17 18
L1/L
L2/N
L3
+
BR
–
U
V
W

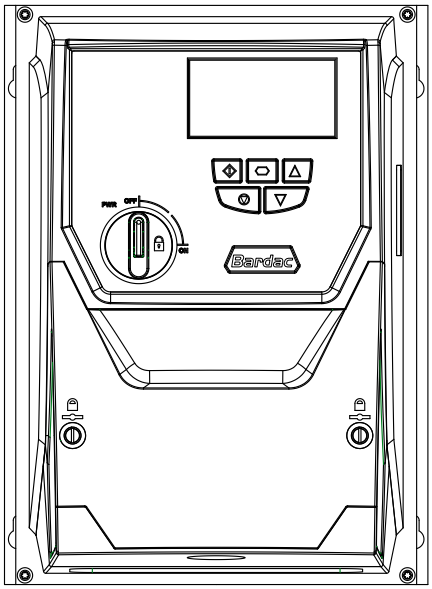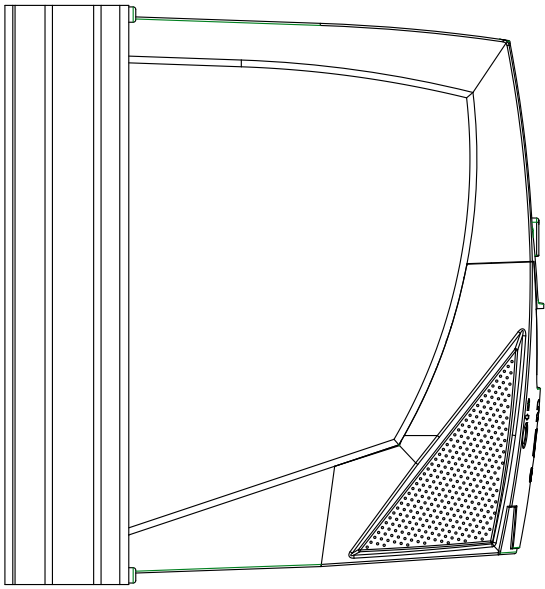
PWR
OFF
ON
Bardac