40 Log Canoe Circle, Stevensville, MD 21666
(410) 604-3400 | bardac.com | driveweb.com

# APPLICATION NOTE

## Drive Applications Support Library

| | |
|---|---|
| **Title** | **CAN Bus Operation** |
| **Related Products** | **P2 Series AC Drives** |
| **Level:**<br>**4** | 1 - Fundamental - No previous experience necessary.<br>2 - Basic - Some basic drives knowledge recommended.<br>3 - Advanced - Some basic drives knowledge required.<br>4 - Expert - Good experience in topic of subject matter recommended. |

## General:

This document provides an overview of the CAN bus functionality that is implemented in the Bardac P2 series drive, detailing which addresses are used to read and write data to / from the P2 in a CAN network.

Bardac Drives adopts a policy of continuous improvement, and whilst every effort has been made to provide accurate and up to date information, the information contained in this document should be used for guidance purposes only and does not form the part of any contract.

## About P2 Series CANopen:

CANopen communication profile is implemented according to the speciation DS301 version 4.02 of CAN in automation (www.can-cia.de). Specific device profiles such as DS402 are not supported.

[ continued on next page ]

## RJ45 Data Connection Pin Configuration:

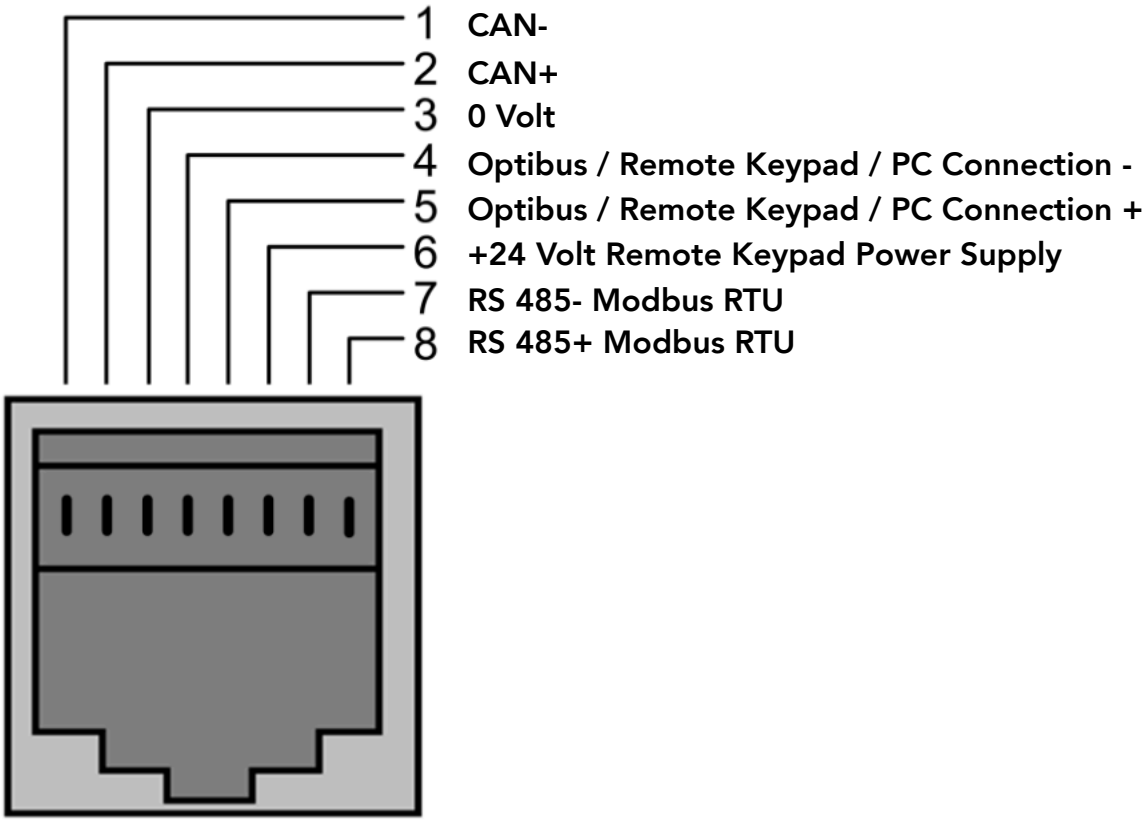


## Operation Setup:

CANopen communication can be enabled by setting parameter P1-12=6.

The required baud rate can be set using parameter P5-02. Available baud rates are 125kbps, 250kbps, 500kbps, 1Mbps.

## P2 Series COB ID:

The P2 series provides the following COB-ID and functions:

| Table 1: Messages and COB-IDs | | | |
|---|---|---|---|
| Type | COB-ID | Function | |
| NMT | 000h | Network management | |
| Sync | 080h | Synchronous message<br>COB-ID can be configured to other value. | |
| Emergency | 080h + Node address | Emergency message<br>COB-ID can be configured to other value. | |
| PDO1 (TX) | 180h + Node address | Process data object.<br>PDO1 is pre-mapped and enabled by default.<br>PDO2 is pre-mapped and disabled by default.<br>Transmission mode, COB-ID and mapping can be configured. | |
| PDO1 (RX) | 200h + Node address | | |
| PDO2 (TX) | 280h + Node address | | |
| PDO2 (RX) | 300h + Node address | | |
| SDO (TX) | 580h + Node address | SDO channel can be used for drive parameter access. | |
| SDO (RX) | 600h + Node address | | |
| Error Control | 700h + Node address | Guarding and Heartbeat function are supported. COB-ID can be configured to other value. | |

Note:

1. P2 SDO channel only supports expedited transmission.
2. P2 drives can only support up to 2 Process Data Objects (PDO). All PDOs are pre-mapped, however PDO2 is disabled by default. Table 2 gives the default PDO mapping information.
3. Customer configuration (mapping) will **NOT** be saved during power down. This means CANopen configuration will restore to its default condition each time drive is powered up.

**Table 2: PDO Default Mapping**

| | Objects No. | Mapped Object | Length | Mapped Function | Transmission Type |
|---|---|---|---|---|---|
| RX PDO 1 | 1 | 2000h | Unsigned 16 | Control command register | 254 Valid immediately |
| | 2 | 2001h | Integer 16 | Speed reference | |
| | 3 | 2002h | Integer 16 | Torque reference | |
| | 4 | 2003h | Unsigned 16 | User ramp reference | |
| | | | | | |
| TX PDO 1 | 1 | 200Ah | Unsigned 16 | Drive status register | 254 Send after receiving RX PDO 1 |
| | 2 | 200Bh | Integer 16 | Motor speed Hz | |
| | 3 | 200Dh | Unsigned 16 | Motor current | |
| | 4 | 200Eh | Integer 16 | Motor torque | |
| | | | | | |
| RX PDO 2 | 1 | 0006h | Unsigned 16 | Dummy | 0 |
| | 2 | 0006h | Unsigned 16 | Dummy | |
| | 3 | 0006h | Unsigned 16 | Dummy | |
| | 4 | 0006h | Unsigned 16 | Dummy | |
| | | | | | |
| TX PDO 2 | 1 | 200Fh | Unsigned 16 | Motor power | 0 |
| | 2 | 2010h | Integer 16 | Drive temperature | |
| | 3 | 2011h | Unsigned 16 | DC bus value | |
| | 4 | 200Ch | Integer 16 | Motor speed (Internal data format) | |

## CANopen specific Object table:

CANopen communication function can be enabled by set drive parameter P1-12=6.
CAN communication baud rate can be setup by using parameter P5-02.
P2 drives provide the following COB-ID and functions:

**Table 3: Communication Profile Object Dictionary**

| Index | Sub index | Function | Access | Type | PDO Map | Default Value |
|---|---|---|---|---|---|---|
| 1000h | 0 | Device type | RO | Unsigned 32 | N | 0 |
| 1001h | 0 | Error register | RO | Unsigned 8 | N | 0 |
| 1002h | 0 | Manufacturer status register | RO | Unsigned 16 | N | 0 |
| 1005h | 0 | COB-ID Sync | RW | Unsigned 32 | N | 00000080h |
| 1008h | 0 | Manufacturer device name | RO | String | N | ODP2 |
| 1009h | 0 | Manufacturer hardware version | RO | String | N | x.xx |
| 100Ah | 0 | Manufacturer software version | RO | String | N | x.xx |
| 100Ch | 0 | Guard time [1ms] | RW | Unsigned 16 | N | 0 |
| 100Dh | 0 | Life time factor | RW | Unsigned 8 | N | 0 |
| 1014h | 0 | COB-ID EMCY | RW | Unsigned 32 | N | 00000080h+Node ID |
| 1015h | 0 | Inhibit time emergency [100us] | RW | Unsigned 16 | N | 0 |
| 1017h | 0 | Producer heart beat time [1ms] | RW | Unsigned 16 | N | 0 |
| 1018h | 0 | Identity object No. Of entries | RO | Unsigned 8 | N | 4 |
| | 1 | Vendor ID | RO | Unsigned 32 | N | |
| | 2 | Product code | RO | Unsigned 32 | N | Drive depended |
| | 3 | Revision number | RO | Unsigned 32 | N | x.xx |
| | 4 | Serial number | RO | Unsigned 32 | N | e.g. 1234/56/789 |
| 1200h | 0 | SDO parameter No. of entries | RO | Unsigned 8 | N | 2 |
| | 1 | COB-ID client -> server (RX) | RO | Unsigned 32 | N | 00000600h+Node ID |
| | 2 | COB-ID server -> client (TX) | RO | Unsigned 32 | N | 00000580h+Node ID |

**Table 3: Communication Profile Object Dictionary**

| Index | Sub index | Function | Access | Type | PDO Map | Default Value |
|---|---|---|---|---|---|---|
| 1400h | 0 | RX PDO1 comms param No. Of entries | RO | Unsigned 8 | N | 2 |
| | 1 | RX PDO1 COB-ID | RW | Unsigned 32 | N | 00000200h+Node ID |
| | 2 | RX PDO1 transmission type | RW | Unsigned 8 | N | 254 |
| 1401h | 0 | RX PDO2 comms param No. of entries | RO | Unsigned 8 | N | 2 |
| | 1 | RX PDO2 COB-ID | RW | Unsigned 32 | N | 80000300h+Node ID |
| | 2 | RX PDO2 transmission type | RW | Unsigned 8 | N | 0 |
| 1600h | 0 | RX PDO1 mapping / No. of entries | RW | Unsigned 8 | N | 4 |
| | 1 | RX PDO1 1st mapped object | RW | Unsigned 32 | N | 20000010h |
| | 2 | RX PDO1 2nd mapped object | RW | Unsigned 32 | N | 20010010h |
| | 3 | RX PDO1 3rd mapped object | RW | Unsigned 32 | N | 20020010h |
| | 4 | RX PDO1 4th mapped object | RW | Unsigned 32 | N | 20030010h |
| 1601h | 0 | RX PDO2 mapping / No. of entries | RW | Unsigned 8 | N | 4 |
| | 1 | RX PDO2 1st mapped object | RW | Unsigned 32 | N | 00060010h |
| | 2 | RX PDO2 2nd mapped object | RW | Unsigned 32 | N | 00060010h |
| | 3 | RX PDO2 3rd mapped object | RW | Unsigned 32 | N | 00060010h |
| | 4 | RX PDO2 4th mapped object | RW | Unsigned 32 | N | 00060010h |
| 1800h | 0 | TX PDO1 comms param No. of entries | RO | Unsigned 8 | N | 3 |
| | 1 | TX PDO1 COB-ID | RW | Unsigned 32 | N | 40000180h+Node ID |
| | 2 | TX PDO1 transmission type | RW | Unsigned 8 | N | 254 |
| | 3 | TX PDO1 inhibit time [100us] | RW | Unsigned 16 | N | 0 |

**Table 3: Communication Profile Object Dictionary**

| Index | Sub index | Function | Access | Type | PDO Map | Default Value |
|---|---|---|---|---|---|---|
| 1801h | 0 | TX PDO2 comms param No. of entries | RO | Unsigned 8 | N | 3 |
| | 1 | TX PDO2 COB-ID | RW | Unsigned 32 | N | C0000280h+Node ID |
| | 2 | TX PDO2 transmission type | RW | Unsigned 8 | N | 0 |
| | 3 | TX PDO2 Inhibit time [100us] | RW | Unsigned 16 | N | 0 |
| 1A00h | 0 | TX PDO1 mapping / No. of entries | RW | Unsigned 8 | N | 4 |
| | 1 | TX PDO1 1st mapped object | RW | Unsigned 32 | N | 200A0010h |
| | 2 | TX PDO1 2nd mapped object | RW | Unsigned 32 | N | 200B0010h |
| | 3 | TX PDO1 3rd mapped object | RW | Unsigned 32 | N | 200D0010h |
| | 4 | TX PDO1 4th mapped object | RW | Unsigned 32 | N | 200E0010h |
| 1A01h | 0 | TX PDO2 mapping / No. of entries | RW | Unsigned 8 | N | 4 |
| | 1 | TX PDO2 1st mapped object | RW | Unsigned 32 | N | 200F0010h |
| | 2 | TX PDO2 2nd mapped object | RW | Unsigned 32 | N | 20100010h |
| | 3 | TX PDO2 3rd mapped object | RW | Unsigned 32 | N | 20110010h |
| | 4 | TX PDO2 4th mapped object | RW | Unsigned 32 | N | 200C0010h |

## PDO transmission type:

Various transmission modes can be selected for each PDO.

For RX PDO, the following modes are supported:

| Table 4: RX PDO Transmission Mode | | |
|---|---|---|
| **Transmission Type** | **Mode** | **Description** |
| 0 - 240 | Synchronous | The received data will be transferred to the drive active control register when the next sync message is received. |
| 254, 255 | Asynchronous | The received data will be transferred to the drive active control register immediately without delay. |

For TX PDO, the following modes are supported:

| Table 5: TX PDO Transmission Mode | | |
|---|---|---|
| **Transmission Type** | **Mode** | **Description** |
| 0 | Acyclic synchronous | TX PDO will only be sent out if the PDO data has changed and PDO will be transmitted on reception of SYNC object. |
| 1 - 240 | Cyclic synchronous | TX PDO will be transmitted synchronously and cyclically. The transmission type indicates the number of SYNC object that are necessary to trigger TX PDO. |
| 254 | Asynchronous | TX PDO will only be transferred once corresponding RX PDO has been received. |
| 255 | Asynchronous | TX PDO will only be transferred anytime if PDO data value has changed. |

## Manufacturer specific Object table:

P2 manufacturer specific object dictionary is defined as follows:

| Manufacturer Specific Profile Area – Control & Status | | | | | |
|---|---|---|---|---|---|
| Index | Sub Index | Function | Access | Type | PDO Map |
| 2000h | 0 | Control command register | RW | Unsigned 16 | Y |
| 2001h | 0 | Speed reference | RW | Integer 16 | Y |
| 2002h | 0 | Torque reference | RW | Integer 16 | Y |
| 2003h | 0 | User ramp reference | RW | Unsigned 16 | Y |
| 2004h | 0 | Speed reference (internal format) | RW | Integer 16 | Y |
| 200Ah | 0 | Drive status register | RO | Unsigned 16 | Y |
| 200Bh | 0 | Motor speed Hz | RO | Unsigned 16 | Y |
| 200Ch | 0 | Motor speed (internal format) | RO | Unsigned 16 | Y |
| 200Dh | 0 | Motor current | RO | Unsigned 16 | Y |
| 200Eh | 0 | Motor torque | RO | Integer 16 | Y |
| 200Fh | 0 | Motor power | RO | Unsigned 16 | Y |
| 2010h | 0 | Drive temperature | RO | Integer 16 | Y |
| 2011h | 0 | DC bus value | RO | Unsigned 16 | Y |
| 2012h | 0 | Digital input status | RO | Unsigned 16 | Y |
| 2013h | 0 | Analog input 1 (percentage) | RO | Unsigned 16 | Y |
| 2014h | 0 | Analog input 2 (percentage) | RO | Unsigned 16 | Y |
| 2015h | 0 | Analog output 1 | RO | Unsigned 16 | Y |
| 2016h | 0 | Analog output 2 | RO | Unsigned 16 | Y |
| 2017h | 0 | User relay output 1 | RO | Unsigned 16 | Y |
| 2018h | 0 | User relay output 2 | RO | Unsigned 16 | Y |
| 2019h | 0 | Reserved | RO | Unsigned 16 | Y |
| 201Ah | 0 | Reserved | RO | Unsigned 16 | Y |
| 201Bh | 0 | Reserved | RO | Unsigned 16 | Y |

| Manufacturer Specific Profile Area – Control & Status | | | | | |
|---|---|---|---|---|---|
| 201Ch | 0 | Reserved | RO | Unsigned 16 | Y |
| 201Dh | 0 | Reserved | RO | Unsigned 16 | Y |
| 201Eh | 0 | Reserved | RO | Unsigned 16 | Y |

## *Drive Specific Object Reference*

**Object 2000h: Control command register**

| 2000h Control Command Register | | | | |
|---|---|---|---|---|
| **Bit 15 ~ Bit 4** | **Bit 3** | **Bit 2** | **Bit 1** | **Bit 0** |
| Reserved | Coast stop | Reset | Fast stop | Run |

If bit 0 is set, drive will start to run provided the certain condition is met.
If bit 1 is set, drive will do fast stop. This bit will override run bit if set
If bit 3 is set, drive will perform coast stop. This bit will override run and fast stop bits if set.
Bit 2 is used to reset the drive under trip conditions. This reset function is edge active (0 ⇔ 1)

**Object 2001h: Speed reference (Hz)**
The data value of this object provides speed reference in Hz format. Data includes once decimal place.
For example, if data value is 500, this means the speed reference is 50.0Hz. If data value is 125, the desired speed reference will be 12.5Hz. If data value set to -1234 (0xFB2E), the speed reference will be -123.4Hz.

**Object 2002h: Torque reference (%)**
The data value of this object provides torque reference in percentage. Data includes once decimal place.
For example, if data value is 500, this means the torque reference is 50.0% of motor rated torque. If data value is 1250, the desired torque reference will be 125%

**Object 2003h: User ramp reference (0.01s)**
The data value of object this set the user ramp time. Value contains one decimal place.
For example, if data value is 30, this means the require user ramp time is 0.3s. If data value is 1234, the desired ramp time will be 12.34s

**Object 2004h: Speed reference (IDL internal format)**
The data value of this object provides speed reference in IDL internal data format, which will provide higher resolution control result.
If motor base frequency <= 100Hz, data value 3000 means speed reference is set to 50Hz.
If motor base frequency <= 200Hz, data value 3000 means speed reference is set to 100Hz.
If motor base frequency > 200Hz, data value 3000 means speed reference is set to 200Hz.

**Object 200Ah: Drive status register**

| 200Ah Drive Status Register | | | |
|---|---|---|---|
| **Bit 15 ~ Bit 8** | **Bit 7 ~ Bit 3** | **Bit 1** | **Bit 0** |
| Trip code if bit 1 is set to 1 | Reserved | Trip | Run |

If bit 0 is set, drive is in run condition.
If bit 1 is set, drive is in trip condition
Bit 8 to Bit 15 provides error/trip code when drive is in trip condition. (Error code is not provided here)

**Object 200Bh : Motor speed (Hz)**
The data value of this object provides motor speed information in Hz unit. Data includes once decimal place. For example, if data value is 500=50.0Hz, -125=-12.5Hz

**Object 200Ch : Motor speed (IDL internal format)**
The data value of this object provides motor speed information in IDL internal data format. See object 2004h for more information about this speed format

**Object 200Dh : Motor current (A)**
The data value of this object provides motor current information. Value contains one decimal place.
For example, if data value is 30, this means the motor current is 3.0A

**Object 200Eh : Motor torque (Q12)**
The data value of this object provides motor output torque information. Value is in Q12 format, 4096 = 100%.

**Object 200Fh : Motor power (kW)**
The data value of this object provides motor output power information. Value contains two decimal places. For example, 1234=12.34kW

## Drive Parameters:

All User Adjustable parameters in Groups 1 to 8 can be accessed by CAN. For further details regarding the parameter functions, please refer to the P2 User Guide.

Type definitions are defined as follows:

WORD Hexadecimal Word

U16 Unsigned 16 Bit Value

S16 Signed 16 Bit Value

| Manufacturer Specific Profile Area – Parameter Group 1 | | | | | | | | |
|---|---|---|---|---|---|---|---|---|
| **Index** | **Sub Index** | **Parameter** | **Function** | **Access** | **Type** | **Scaling** | **PDO Map** | **Remark** |
| 2065h | 0 | P1-01 | Maximum Speed / Frequency | RW | U16 | 3000 = 50.0Hz | N | 2000h + 101d |
| 2066h | 0 | P1-02 | Maximum Speed / Frequency | RW | U16 | 3000 = 50.0Hz | N | 2000h + 102d |
| 2067h | 0 | P1-03 | Acceleration Time | RW | U16 | 300 = 30.0s | N | |
| 2068h | 0 | P1-04 | Deceleration Time | RW | U16 | 300 = 30.0s | N | |
| 2069h | 0 | P1-05 | Stopping Mode | RW | U16 | | N | |
| 206Ah | 0 | P1-06 | Energy Optimiser | RW | WORD | | N | |
| 206Bh | 0 | P1-07 | Motor Rated Voltage | RW | U16 | 230 = 23 V | N | |
| 206Ch | 0 | P1-08 | Motor Rated Current | RW | U16 | 1 = 0.1A | N | |
| 206Dh | 0 | P1-09 | Motor Rated Frequency | RW | U16 | 50 = 50Hz | N | |
| 206Eh | 0 | P1-10 | Motor Rated Speed | RW | U16 | 1500 = 1500rpm | N | |
| 206Fh | 0 | P1-11 | Boost Voltage | RW | S16 | -1 = Auto<br>0 = Disabled<br>1 = 0.1% | N | |
| 2070h | 0 | P1-12 | Control Mode | RW | U16 | | N | |
| 2071h | 0 | P1-13 | I/O Configuration | RW | U16 | | N | … |

| Manufacturer Specific Profile Area – Parameter Group 1 | | | | | | | | |
|---|---|---|---|---|---|---|---|---|
| **Index** | **Sub Index** | **Parameter** | **Function** | **Access** | **Type** | **Scaling** | **PDO Map** | **Remark** |
| 2072h | 0 | P1-14 | Parameter Access | RW | U16 | | N | 2000h + 114d |

- - - - - - - - - - - - - - -

| Manufacturer Specific Profile Area – Parameter Group 2 | | | | | | | | |
|---|---|---|---|---|---|---|---|---|
| **Index** | **Sub Index** | **Parameter** | **Function** | **Access** | **Type** | **Scaling** | **PDO Map** | **Remark** |
| 20C9h | 0 | P2-01 | Preset speed 1 | RW | U16 | 3000 = 50.0Hz | N | 2000h + 201d |
| 20CAh | 0 | P2-02 | Preset speed 2 | RW | U16 | 3000 = 50.0Hz | N | … |
| 20CBh | 0 | P2-03 | Preset speed 3 | RW | U16 | 3000 = 50.0Hz | N | |
| 20CCh | 0 | P2-04 | Preset speed 4 | RW | U16 | 3000 = 50.0Hz | N | |
| 20CDh | 0 | P2-05 | Preset speed 5 | RW | U16 | 3000 = 50.0Hz | N | |
| 20CEh | 0 | P2-06 | Preset speed 6 | RW | U16 | 3000 = 50.0Hz | N | |
| 20CFh | 0 | P2-07 | Preset speed 7 | RW | U16 | 3000 = 50.0Hz | N | |
| 20D0h | 0 | P2-08 | Preset speed 8 | RW | U16 | 3000 = 50.0Hz | N | |
| 20D1h | 0 | P2-09 | Skip frequency centre point | RW | U16 | 3000 = 50.0Hz | N | |
| 20D2h | 0 | P2-10 | Skip frequency band | RW | U16 | 3000 = 50.0Hz | N | |
| 20D3h | 0 | P2-11 | Analog output 1 function select | RW | U16 | | N | |
| 20D4h | 0 | P2-12 | Analog output 1 format | RW | U16 | | N | |
| 20D5h | 0 | P2-13 | Analog output 2 function select | RW | U16 | | N | |
| 20D6h | 0 | P2-14 | Analog output 2 format | RW | U16 | | N | |
| 20D7h | 0 | P2-15 | User relay 1 output function select | RW | U16 | | N | |

| Manufacturer Specific Profile Area – Parameter Group 2 | | | | | | | | |
|---|---|---|---|---|---|---|---|---|
| Index | Sub Index | Parameter | Function | Access | Type | Scaling | PDO Map | Remark |
| 20D8h | 0 | P2-16 | User relay 1 upper limit | RW | U16 | 1 = 0.1% | N | |
| 20D9h | 0 | P2-17 | User relay 1 lower limit | RW | U16 | 1 = 0.1% | N | |
| 20DAh | 0 | P2-18 | User relay 2 output function select | RW | U16 | | N | |
| 20DBh | 0 | P2-19 | User relay 2 upper limit | RW | U16 | 1 = 0.1% | N | |
| 20DCh | 0 | P2-20 | User relay 2 lower limit | RW | U16 | 1 = 0.1% | N | |
| 20DDh | 0 | P2-21 | Display scaling factor | RW | U16 | 1 = 0.001 | N | |
| 20DEh | 0 | P2-22 | Display scaling source | RW | U16 | | N | |
| 20DFh | 0 | P2-23 | Zero Speed holding time | RW | U16 | 1 = 0.1 | N | |
| 20E0h | 0 | P2-24 | Effective switching frequency | RW | U16 | S2…S3 1=0.01s<br>S2…S3 1=0.1s | N | |
| 20E1h | 0 | P2-25 | Fast deceleration ramp time | RW | U16 | 1 | N | |
| 20E2h | 0 | P2-26 | Spin start enable | RW | WORD | 1 = 0.01 | N | |
| 20E3h | 0 | P2-27 | Standby mode | RW | U16 | | N | |
| 20E4h | 0 | P2-28 | Slave speed scaling control | RW | U16 | 1 = 0.1 | N | |
| 20E5h | 0 | P2-29 | Slave Speed scaling factor | RW | S16 | | N | |
| 20E6h | 0 | P2-30 | Analog input 1 format | RW | U16 | 1 = 0.1 | N | |
| 20E7h | 0 | P2-31 | Analog input 1 scaling | RW | U16 | 1 = 0.1 | N | |
| 20E8h | 0 | P2-32 | Analog input 1 offset | RW | S16 | | N | |

| Manufacturer Specific Profile Area – Parameter Group 2 | | | | | | | | |
|---|---|---|---|---|---|---|---|---|
| Index | Sub Index | Parameter | Function | Access | Type | Scaling | PDO Map | Remark |
| 20E9h | 0 | P2-33 | Analog input 2 format | RW | U16 | 1 = 0.1 | N | |
| 20EAh | 0 | P2-34 | Analog input 2 scaling | RW | U16 | 1 = 0.1 | N | |
| 20EBh | 0 | P2-35 | Analog input 2 offset | RW | S16 | | N | |
| 20ECh | 0 | P2-36 | Start mode select | RW | U16 | | N | |
| 20EDh | 0 | P2-37 | Keypad restart speed | RW | U16 | | N | |
| 20EEh | 0 | P2-38 | Mains loss stop control | RW | U16 | | N | |
| 20EFh | 0 | P2-39 | Parameter Lock | RW | WORD | | N | |
| 20F0h | 0 | P2-40 | Extended parameter access code definition | RW | U16 | | N | 2000h + 240d |

- - - - - - - - - - - - - - -

| Manufacturer Specific Profile Area – Parameter Group 3 | | | | | | | | |
|---|---|---|---|---|---|---|---|---|
| Index | Sub Index | Parameter | Function | Access | Type | Scaling | PDO Map | Remark |
| 212Dh | 0 | P3-01 | User PID Proportional Gain | RW | U16 | 1 = 0.1 | N | 2000h + 301d |
| 212Eh | 0 | P3-02 | User PID Integral time constant | RW | U16 | 1 = 0.1 | N | ... |
| 212Fh | 0 | P3-03 | User PID Differential time constant | RW | U16 | 1 = 0.01 | N | |
| 2130h | 0 | P3-04 | User PID operating mode | RW | WORD | | N | |
| 2131h | 0 | P3-05 | User PID reference select | RW | U16 | 1 =1 | N | |
| 2132h | 0 | P3-06 | User PID digital reference | RW | U16 | 1 = 0.1% | N | |

| Manufacturer Specific Profile Area – Parameter Group 3 | | | | | | | | |
|---|---|---|---|---|---|---|---|---|
| **Index** | **Sub Index** | **Parameter** | **Function** | **Access** | **Type** | **Scaling** | **PDO Map** | **Remark** |
| 2133h | 0 | P3-07 | User PID controller output high limit | RW | U16 | 1 = 0.1% | N | |
| 2134h | 0 | P3-08 | User PID controller output low limit | RW | U16 | 1 = 0.1% | N | |
| 2135h | 0 | P3-09 | User PID output control | RW | U16 | | N | |
| 2136h | 0 | P3-10 | User PID feedback select | RW | WORD | | N | |
| 2137h | 0 | P3-11 | PID error to enable ramps | RW | U16 | 1 = 0.1% | N | |
| 2138h | 0 | P3-12 | PID feedback value display scaling factor | RW | U16 | 0: Disabled<br>1 = 0.001 | N | |
| 2139h | 0 | P3-13 | PID feedback wake-up level | RW | U16 | 1 = 0.1% | N | |
| 213Eh | 0 | P3-18 | PID Operation Control | RW | WORD | | N | |

- - - - - - - - - - - - - - -

| Manufacturer Specific Profile Area – Parameter Group 4 | | | | | | | | |
|---|---|---|---|---|---|---|---|---|
| **Index** | **Sub Index** | **Parameter** | **Function** | **Access** | **Type** | **Scaling** | **PDO Map** | **Remark** |
| 2191h | 0 | P4-01 | Control mode | RW | U16 | | N | 2000h + 401d |
| 2192h | 0 | P4-02 | Motor parameter Auto-tune | RW | U16 | | N | ... |
| 2193h | 0 | P4-03 | Vector Speed controller Proportional Gain | RW | U16 | 1 = 0.1% | N | |
| 2194h | 0 | P4-04 | Vector Speed controller I-time constant | RW | U16 | 1 = 0.001s | N | |
| 2195h | 0 | P4-05 | Motor power factor | RW | U16 | 99 = 0.99 | N | |
| 2196h | 0 | P4-06 | Torque Control reference | RW | U16 | | N | |

| Manufacturer Specific Profile Area – Parameter Group 4 | | | | | | | | |
|---|---|---|---|---|---|---|---|---|
| Index | Sub Index | Parameter | Function | Access | Type | Scaling | PDO Map | Remark |
| 2197h | 0 | P4-07 | Max motoring torque limit | RW | U16 | 2000 = 200.0% | N | |
| 2198h | 0 | P4-08 | Minimum torque limit | RW | WORD | 1 = 0.1% | N | |
| 2199h | 0 | P4-09 | Generator mode maximum torque limit | RW | U16 | 1 = 1% | N | |
| 219Ah | 0 | P4-10 | V/F characteristic adjustment frequency | RW | U16 | 1 = 0.1% | N | |
| 219Bh | 0 | P4-11 | V/F characteristic adjustment voltage | RW | S16 | 1 = 0.1% | N | |

- - - - - - - - - - - - - - -

| Manufacturer Specific Profile Area – Parameter Group 5 | | | | | | | | |
|---|---|---|---|---|---|---|---|---|
| Index | Sub Index | Parameter | Function | Access | Type | Scaling | PDO Map | Remark |
| 21F5h | 0 | P5-01 | Fieldbus drive address | RW | U16 | 1 =1 | N | 2000h + 501d |
| 21F6h | 0 | P5-02 | CANbus baudrate | RW | WORD | 0 = 125kbps<br>1 = 250kbps | N | … |
| 21F7h | 0 | P5-03 | Modbus baudrate | RW | WORD | 0 = 9.6kbps<br>1 = 19.2kpbs | N | |
| 21F8h | 0 | P5-04 | Modbus data format | RW | WORD | 0 = N-1<br>1 = N-2 | N | |
| 21F9h | 0 | P5-05 | Comms loss timeout | RW | U16 | 1 = 0.1s | N | |
| 21FAh | 0 | P5-06 | Communications loss action | RW | WORD | | N | |
| 21FBh | 0 | P5-07 | Fieldbus ramp control | RW | WORD | | N | |
| 21FCh | 0 | P5-08 | Fieldbus PDO 4 Select | RW | WORD | | N | |
| 2200h | 0 | P5-12 | Fieldbus PDO 3 Select | RW | WORD | | N | |
| 2201h | 0 | P5-13 | Fieldbus PDI 4 Select | RW | WORD | | N | |

| Manufacturer Specific Profile Area – Parameter Group 5 | | | | | | | | |
|---|---|---|---|---|---|---|---|---|
| Index | Sub Index | Parameter | Function | Access | Type | Scaling | PDO Map | Remark |
| 2202h | 0 | P5-14 | Fieldbus PDI 3 Select | RW | WORD | | N | |

- - - - - - - - - - - - - - -

| Manufacturer Specific Profile Area – Parameter Group 6 | | | | | | | | |
|---|---|---|---|---|---|---|---|---|
| Index | Sub Index | Parameter | Function | Access | Type | Scaling | PDO Map | Remark |
| 2259h | 0 | P6-01 | Firmware Upgrade enable | RW | U16 | | N | 2000h + 601d |
| 215Ah | 0 | P6-02 | Auto thermal management | RW | WORD | | N | … |
| 215Bh | 0 | P6-03 | Auto-reset delay time | RW | U16 | | N | |
| 215Ch | 0 | P6-04 | User relay hysteresis band | RW | U16 | 1 = 0.1% | N | |
| 215Dh | 0 | P6-05 | Encoder feedback enable | RW | WORD | | N | |
| 215Eh | 0 | P6-06 | Encoder PPR | RW | U16 | | N | |
| 215Fh | 0 | P6-07 | Speed error trip level | RW | U16 | 1 = 0.1% | N | |
| 2160h | 0 | P6-08 | Max speed ref frequency | RW | U16 | | N | |
| 2161h | 0 | P6-09 | Speed Droop Control | RW | U16 | 1 = 0.1% | N | |
| 2162h | 0 | P6-10 | Enable PLC operation | RW | WORD | | N | |
| 2163h | 0 | P6-11 | Speed hold time on enable | RW | U16 | 1 = 0.1s | N | |
| 2164h | 0 | P6-12 | Speed hold time on disable | RW | U16 | 1 = 0.1s | N | |
| 2165h | 0 | P6-13 | Hoist mode brake release delay | RW | U16 | 1 = 0.1s | N | |
| 2166h | 0 | P6-14 | Hoist mode brake apply delay | RW | U16 | 1 = 0.1s | N | |
| 2167h | 0 | P6-15 | Torque threshold for hoist brake release | RW | U16 | 1 = 0.1% | N | |
| 2168h | 0 | P6-16 | Torque threshold timeout | RW | U16 | 1 = 0.1s | N | |

| Manufacturer Specific Profile Area – Parameter Group 6 | | | | | | | | |
|---|---|---|---|---|---|---|---|---|
| Index | Sub Index | Parameter | Function | Access | Type | Scaling | PDO Map | Remark |
| 2169h | 0 | P6-17 | Max Torque limit timeout | RW | U16 | 1 = 0.1s | N | |
| 216Ah | 0 | P6-18 | DC injection braking voltage | RW | U16 | 0 = Auto<br>1= 0.1% | N | |
| 216Bh | 0 | P6-19 | Brake resistor value | RW | U16 | 1 =1 | N | |
| 216Ch | 0 | P6-20 | Brake resistor power | RW | U16 | 1= 0.01kw | N | |
| 216Dh | 0 | P6-21 | Brake chopper UT duty cycle | RW | U16 | 1 = 0.1% | N | |
| 216Eh | 0 | P6-22 | Reset cooling fan run-time | RW | WORD | | N | |
| 216Fh | 0 | P6-23 | Reset kWh meter | RW | WORD | | N | |
| 2170h | 0 | P6-24 | Service time interval | RW | U16 | 1=1 | N | |
| 2171h | 0 | P6-25 | Reset service indicator | RW | WORD | 1=1 | N | |
| 2172h | 0 | P6-26 | Analog output 1 scaling | RW | U16 | 1 = 0.1 | N | |
| 2173h | 0 | P6-27 | Analog output 1 offset | RW | S16 | 1 = 0.1% | N | |
| 2174h | 0 | P6-28 | P0-80 display value index | RW | U16 | | N | |
| 2175h | 0 | P6-29 | Save User Parameters as default | RW | WORD | | N | |
| 2276h | 0 | P6-30 | Level 3 access code | RW | U16 | | N | 2000h + 630d |

- - - - - - - - - - - - - - -

| Manufacturer Specific Profile Area – Parameter Group 7 | | | | | | | | |
|---|---|---|---|---|---|---|---|---|
| Index | Sub Index | Parameter | Function | Access | Type | Scaling | PDO Map | Remark |
| 22BDh | 0 | P7-01 | Motor Stator resistance | RW | U16 | 1 = 0.001ohm | N | 2000h + 701d |
| 22Beh | 0 | P7-02 | Motor Rotor resistance | RW | U16 | 1 = 0.001ohm | N | ... |
| 22BFh | 0 | P7-03 | Motor stator inductance | RW | U16 | 1 = 0.0001H | N | |

| Manufacturer Specific Profile Area – Parameter Group 7 | | | | | | | | |
|---|---|---|---|---|---|---|---|---|
| Index | Sub Index | Parameter | Function | Access | Type | Scaling | PDO Map | Remark |
| 22C0h | 0 | P7-04 | Motor Magnetising Current | RW | U16 | 1 = 0.1A | N | |
| 22C1h | 0 | P7-05 | Motor Leakage Coefficient | RW | U16 | 1 = 0.001 | N | |
| 22C2h | 0 | P7-06 | Motor Stator inductance (PM only) | RW | U16 | 1 = 0.0001H | N | |
| 22C3h | 0 | P7-07 | Enhanced generator control | RW | WORD | | N | |
| 22C4h | 0 | P7-08 | Parameter adaptation | RW | WORD | | N | |
| 22C5h | 0 | P7-09 | Over voltage current limit | RW | U16 | 1 =0.1% | N | |
| 22C6h | 0 | P7-10 | Load Inertia Factor | RW | U16 | 1=1 | N | |
| 22C7h | 0 | P7-11 | Pulse width minimum limit | RW | U16 | 1 =1 | N | |
| 22C8h | 0 | P7-12 | V/F mode magnetising period | RW | U16 | | N | |
| 22C9h | 0 | P7-13 | Vector Speed Controller D-Gain | RW | U16 | 1 = 0.1% | N | |
| 22CAh | 0 | P7-14 | Low frequency torque boost | RW | U16 | 1 =0.1% | N | |
| 22CBh | 0 | P7-15 | Torque boost frequency limit | RW | U16 | 1 =0.1% | N | 2000h + 715d |

- - - - - - - - - - - - - - -

| Manufacturer Specific Profile Area – Parameter Group 8 | | | | | | | | |
|---|---|---|---|---|---|---|---|---|
| Index | Sub Index | Parameter | Function | Access | Type | Scaling | PDO Map | Remark |
| 2321h | 0 | P8-01 | Accel Ramp 2 | RW | U16 | S2…S3 1 = 0.01s<br>S4…S7 1 = 0.1s | N | 2000h + 801d |

| Manufacturer Specific Profile Area – Parameter Group 8 | | | | | | | | |
|---|---|---|---|---|---|---|---|---|
| **Index** | **Sub Index** | **Parameter** | **Function** | **Access** | **Type** | **Scaling** | **PDO Map** | **Remark** |
| 2322h | 0 | P8-02 | Speed boundary - Accel ramp 1 ➔ 2 | RW | U16 | 3000 = 50.0Hz | N | ... |
| 2323h | 0 | P8-03 | Accel Ramp 3 | RW | U16 | S2…S3 1 = 0.01s<br>S4…S7 1 = 0.1s | N | |
| 2324h | 0 | P8-04 | Speed boundary - Accel ramp 2 ➔ 3 | RW | U16 | 3000 = 50.0Hz | N | |
| 2325h | 0 | P8-05 | Accel Ramp 4 | RW | U16 | S2…S3 1 = 0.01s<br>S4…S7 1 = 0.1s | N | |
| 2326h | 0 | P8-06 | Speed boundary - Accel ramp 3 ➔ 4 | RW | U16 | 3000 = 50.0Hz | N | |
| 2327h | 0 | P8-07 | Decel Ramp 4 | RW | U16 | S2…S3 1 = 0.01s<br>S4…S7 1 = 0.1s | N | |
| 2328h | 0 | P8-08 | Speed boundary - Accel ramp 4 ➔ 3 | RW | U16 | 3000 = 50.0Hz | N | |
| 2329h | 0 | P8-09 | Decel Ramp 3 | RW | U16 | S2…S3 1 = 0.01s<br>S4…S7 1 = 0.1s | N | |
| 232Ah | 0 | P8-10 | Speed boundary - Accel ramp 3 ➔ 2 | RW | U16 | 3000 = 50.0Hz | N | |
| 232Bh | 0 | P8-11 | Decel Ramp 2 | RW | U16 | S2…S3 1 = 0.01s<br>S4…S7 1 = 0.1s | N | |
| 232Ch | 0 | P8-12 | Speed boundary - Accel ramp 2 ➔ 1 | RW | U16 | 3000 = 50.0Hz | N | |
| 232Dh | 0 | P8-13 | Ramp select by Preset Speed | RW | WORD | | N | |
| 232Eh | 0 | | | RW | | | N | |
| 232Fh | 0 | P8-15 | | RW | - | | N | 2000h + 815d |

## Drive error code information:

In the event of a trip, an error code is returned in the High Byte of the drive status word. The fault values correspond to the following table

| Fault Code | No. | Description | Fault Code | No. | Description |
|---|---|---|---|---|---|
| **no-Flt** | 00 | No Fault | **AtF-01** | 40 | Measured motor stator resistance varies between phases |
| **OI-b** | 01 | Brake channel over current | **AtF-02** | 41 | Measured motor stator resistance is too large |
| **OL-br** | 02 | Brake resistor overload | **AtF-03** | 42 | Measured motor inductance is too low |
| **O-I** | 03 | Instantaneous over current | **AtF-04** | 43 | Measured motor inductance is too large |
| **I.t-trp** | 04 | Motor Thermal Overload (I2t) | **AtF-05** | 44 | Measured motor parameters are not convergent |
| **SAFE-1** | 05 | Safety input circuit error (Processor output) | **AtF-06** | 45 | Reserved |
| **O-Volt** | 06 | Over voltage on DC bus | **AtF-07** | 46 | Reserved |
| **U-Volt** | 07 | Under voltage on DC bus | **AtF-08** | 47 | Reserved |
| **O-t** | 08 | Heatsink over temperature | **AtF-09** | 48 | Reserved |
| **U-t** | 09 | Under temperature | **AtF-10** | 49 | Reserved |
| **P-dEF** | 10 | Factory Default parameters have been loaded | **SC-F01** | 50 | Modbus comms loss fault |
| **E-trip** | 11 | External trip | **SC-F02** | 51 | CANopen comms loss trip |
| **SC-ObS** | 12 | Optibus comms loss | **SC-F03** | 52 | Anybus module comms loss trip |
| **FLt-dc** | 13 | DC bus ripple too high | **SC-F04** | 53 | IO card comms loss trip |
| **P-LOSS** | 14 | Input phase loss trip | **SC-F05** | 54 | Reserved |
| **h O-I** | 15 | Instantaneous over current on drive output | **SC-F06** | 55 | Reserved |
| **th-Flt** | 16 | Faulty thermistor on heatsink | **SC-F07** | 56 | Reserved |
| **dAtA-F** | 17 | Internal memory fault (IO) | **SC-F08** | 57 | Reserved |
| **4-20 F** | 18 | 4-20mA Signal Lost | **SC-F09** | 58 | Reserved |
| **dAtA-E** | 19 | Internal memory fault (DSP) | **SC-F10** | 59 | Reserved |
| **U-dEF** | 20 | User Default Parameters Loaded | **OF-01** | 60 | Internal link to option module loss |

| Fault Code | No. | Description | Fault Code | No. | Description |
|---|---|---|---|---|---|
| **F-Ptc** | 21 | Motor PTC thermistor trip | **OF-02** | 61 | Option module in exceptional condition |
| **FAN-F** | 22 | Cooling Fan Fault | **OF-03** | 62 | Reserved |
| **O-hEAt** | 23 | Environmental temperature too high | **OF-04** | 63 | Reserved |
| **O-torq** | 24 | Maximum torque limit trip / Over torque (HVAC) | **OF-05** | 64 | Reserved |
| **U-torq** | 25 | Output torque too low (hoist) / Under torque (HVAC) | **OF-06** | 65 | Reserved |
| **Out-F** | 26 | Drive output fault | **OF-07** | 66 | Reserved |
| **Err-01** | 27 | Reserved | **OF-08** | 67 | Reserved |
| **Err-02** | 28 | Reserved | **OF-09** | 68 | Reserved |
| **SAFE-2** | 29 | Safety input circuit error (Buffer output) | **OF-10** | 69 | Reserved |
| **Enc-01** | 30 | Encoder comms/data loss | **PLC-01** | 70 | Unsupported PLC function block |
| **Enc-02** | 31 | Encoder speed error | **PLC-02** | 71 | PLC program over size |
| **Enc-03** | 32 | Incorrect Encoder PPR count set in parameters | **PLC-03** | 72 | Divide by 0 |
| **Enc-04** | 33 | Encoder Channel A Fault | **PLC-04** | 73 | Lower limit large than higher limit |
| **Enc-05** | 34 | Encoder Channel B Fault | **PLC-05** | 74 | Table function block index overflow |
| **Enc-06** | 35 | Encoder Channels A & B Fault | **PLC-06** | 75 | Reserved |
| **Enc-07** | 36 | RS485 data channel error (servo) | **PLC-07** | 76 | Reserved |
| **Enc-08** | 37 | IO comms loss (servo) | **PLC-08** | 77 | Reserved |
| **Enc-09** | 38 | Wrong type encoder (servo) | **PLC-09** | 78 | Reserved |
| **Enc-10** | 39 | KTY trip (servo) | **PLC-10** | 79 | Reserved |